PENNCO SILVER

CAST IRON BOILERS

Pennco SILVER makes Simple Comfort, Affordable.

PENNCO SILVER
CAST IRON BOILERS

Affordable Hydronic Heating

Pennco SILVER

While today's tough economy makes it harder than ever to meet basic needs – simple comfort shouldn't be a sacrifice. That's why Pennco now offers SILVER – a full line of affordable heating products. American made Pennco SILVER is designed, tested and assembled to ensure customers get the very best in home heating comfort and value.

Added peace-of-mind is available in the form of five and ten year Comfort Plus Extended Parts & Labor Warranties.

Efficiency

Pennco SILVER features economical, mostly mid-efficiency heating solutions. Pennco understands that no one really plans to replace their heating system and not everyone can afford to upgrade to high efficiency. If your home heating appliance is more than 15 years old, even a mid-efficiency upgrade could save you money on your utility bills.

Selection

Pennco SILVER features a wide range of heating equipment suitable for residential and light commercial applications.

15B Series

FSB Series

KSW Series

16 Series

KSC Series

Hotline

Boiler Selection Guide

Model	Application	Fuel	Efficiency	Capacity	Combustion	Venting
15B	Residential Hot Water Boiler	Gas	Mid-Efficiency	45 - 70 - 96 - 120 - 145 - 175 - 195 - 245 - 295 MBH	Atmospheric	Chimney
FSB	Residential Hot Water Boiler	Gas	Mid-Efficiency	42.5 - 75 - 112.5 - 150 - 187.5 - 225 MBH	Fan Assist	Chimney or Side-Wall
KSW	Residential Hot Water Boiler	Oil	Energy Star/ Mid-Efficiency *(See page 5 for model specifics)*	84 - 105 - 140 - 126 - 175 - 210 - 168 - 245 - 280 MBH	Atmospheric	Chimney
16	Residential Steam Boiler	Gas	Mid-Efficiency	75 - 112 - 150 - 187 - 225 - 262 - 299 MBH	Atmospheric	Chimney
KSC	Residential Steam Boiler	Oil	Energy Star/ Mid-Efficiency *(See page 6 for model specifics)*	91 - 140 - 175 - 210 - 245 - 280 - 315 - 385 MBH	Atmospheric	Chimney
Hotline	Residential/Light Commercial Indirect Hot Water Heater	N/A	*	30 - 40 - 50 - 80 - 119 Gal.	N/A	N/A

* Efficiency varies based on boiler efficiency and other factors.

15B Series

Gas-Fired Hot Water Boiler

The Pennco 15B Series Boiler has been designed with features making it the ideal home heating solution. With quality features such as an advanced heat exchanger design, greater BTU input per sectional size and optional electronic ignition, the 15B Series can achieve fuel efficiencies up to 82% AFUE.

System Features

Quality Heat Exchanger Design – The 15B Series features a robust cast iron heat exchanger with greater weight per section resulting in higher efficiencies and longer boiler life. The sections are connected with cast iron push nipples, which expand and contract at the same rate as the sections ensuring a water tight seal. Additional sizes are available and when utilized in a seven section configuration, the 15B Series can reach nearly 300 MBH input.

High Efficiency – The 15B Series provides annual fuel utilization efficiency up to 82% as certified by the US Department of Energy testing standards.

Hi-Limit Control – The Honeywell hi-limit control has been separated from the circulator relay for ease of serviceability and to reduce potential service parts costs.

Easy Installation and Maintenance – A compact design, low profile draft hood and top supply piping connections allow for easier installation. The pilot is mounted to the front of the burner base.

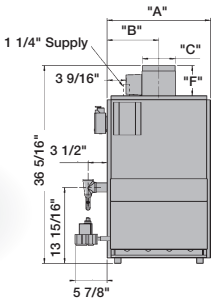

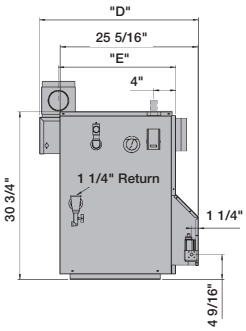

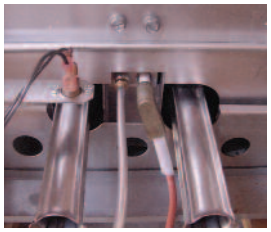

Standard Equipment:

- Boiler Jacket
- Cast-Iron Boiler Battery
- High Limit Control
- Vent Damper Relay
- Temperature/Pressure Gauge
- Circulator
- Main Gas Burners
- Combination 24-Volt Gas Control *includes:* Automatic Gas Valve, Gas Pressure Regulator, Automatic Pilot, Safety Shut Off, Pilot Flow Adjustment, Pilot Filter
- A.S.M.E. Relief Valve
- Drain Valve
- Spill Switch
- Rollout Switch
- Automatic Vent Damper

Optional Equipment:

- Intermittent Electric Ignition Pilot System

Note: Propane option available.

Specifications:

MEA# 39-86E Vol VIII

Boiler Number	Input Mbh (1)	Heating Capacity Mbh (1)	Net I=B=R Rating Water Mbh (1)**	Natural§ Gas Inlet	Dimensions (Inches)						Pump Size Supply & Return Tappings	Number of Burners	AFUE Elec. Ign. & Damper	AFUE Std. Pilot & Damper
					A	B	C	D	E	F				
15B045	45	37	32	1/2"	11 1/4	5 5/8	4	27 1/8	20 7/16	4 15/16	1 1/4"	1	82.0%	80.0%
15B070	70	57	50	1/2"	15 1/8	7	5	28 1/8	20 15/16	4 15/16	1 1/4"	2	82.0%	80.0%
15B096	96	79	69	1/2"	15 1/8	7	5	28 1/8	20 15/16	4 15/16	1 1/4"	2	82.0%	80.0%
15B120	120	98	85	1/2"	19	9 1/2	6	29 1/8	21 7/16	5 7/16	1 1/4"	3	82.0%	80.0%
15B145	145	119	103	1/2"	19	9 1/2	6	29 1/8	21 7/16	5 7/16	1 1/4"	3	82.0%	80.0%
15B175	175	141	123	1/2"	22 7/8	11 3/16	7	30 1/8	21 15/16	5 15/16	1 1/4"	4	80.5%	80.0%
15B195	195	157	137	1/2"	22 7/8	11 3/16	7	30 1/8	21 15/16	5 15/16	1 1/4"	4	80.5%	80.0%
15B245	245	197	171	3/4"	26 3/4	13 6/16	8	31 1/8	22 7/16	6 15/16	1 1/4"	5	80.5%	80.0%
15B295	295	237	206	3/4"	30 5/8	15 5/16	9	32 1/8	22 15/16	8 15/16	1 1/4"	6	80.5%	80.0%

— All boilers are design certified for installation on noncombustible floor.
— For installation on combustible floors use combustible floor kit.
— Recommended chimney height 20 feet. In special cases where conditions permit, chimney height may be reduced to 10 feet. Refer to the latest revision of NFGC.
— Electric service to be 120 Volts, 15 Amps, 60 Hz.
— The MEA number for the this boiler is 39-86-E Vol VIII.

(1) For elevations above 2000 feet, ratings should be reduced at a rate of 4% for each 1000 feet above sea level.
(2) Base on 170° temperature in radiators.
(3) Tank sized for non-ferrous baseboard or radiant panel systems. Increase size for cast iron baseboard and radiation.
— Net I=B=R Water Ratings based on piping and pickup allowance of 1.15. Consult manufacturer before selecting boiler for installations having unusual piping and pickup requirements, such as intermittent system operation, extensive piping systems, etc.
§ Propane gas Inlet, all units, 1/2"

C.S.A. Certified For Natural Gas Or Propane

Tested For 100 PSI ASME Working Pressure

FSB Series

Gas-Fired Hot Water Boiler Side-Wall or Chimney Vent

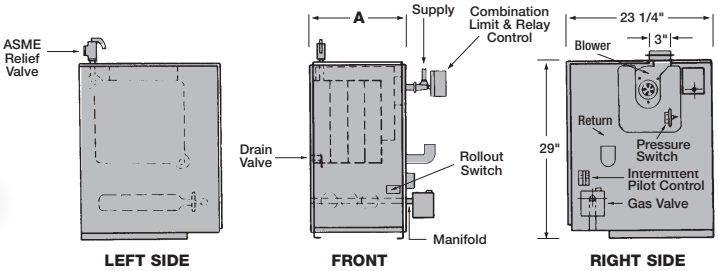

Standard Equipment:

- Assembled boiler with insulated jacket
- 3" x 4" galvanized increaser fitting and silicone sealant to adapt 3" fan outlet to 4" vent pipe for chimney venting
- Combination high limit control and circulator relay
- 24 volt transformer to power gas control system
- Flame rollout safety shut-off fuse link (rollout switch)
- Pressure switch for proving air flow
- Combination pressure/temperature gauge (packed separately)
- 1 1/4" circulator
- 3/4" boiler drain valve
- 30 lb. ASME relief valve
- Completely installed and wired gas control system with burners and manifold, *consisting of:*
  - Stainless steel burners
  - Automatic redundant combination gas valve, 24 volt, with pilot filter
  - Pressure regulator
  - Intermittent Pilot Control, continuous re-try, 100% shut-off for natural & propane gas
  - Combination pilot/burner/electrode/flame sensor
  - Complete installation instructions

Optional Equipment:

- Combustible floor plate – 24" x 30" for 2-5 section; 30" x 30" for 6 & 7 section
- Tjernlund VH-1-3" side wall vent hood
- Tjernlund VH-1-4" side wall vent hood
- Propane gas to natural gas conversion kits
- Natural gas to propane gas conversion kits

Specifications:

MEA# 484-84-E Vol. III

Boiler Model Number	Number of Sections	AGA Input (MBH)††	DOE Heating Capacity (MBH)†	I=B=R Net Rating (MBH)††	Width A	Annual Fuel Efficiency (AFUE)
FSB-2	2	42.5	36	31	11"	84.4
FSB-3	3	75	63	55	14 1/4"	83.4
FSB-4	4	112.5	94	82	17 1/4"	83.0
FSB-5	5	150	125	109	20 3/4"	82.7
FSB-6	6	187.5	155	135	24"	82.3
FSB-7	7	225	186	162	27 1/4"	82.0

†† MBH = 1,000 Btuh
Btuh = British Thermal Unit Per Hour

† AFUE and Heating Capacity are based upon D.O.E (Department of Energy) test procedure.

* Conventional venting through a lined chimney use 4" Flue Adapter provided.

* Through the wall venting – Sizes 2-3-4-5 use 3" Stainless Steel Vent Pipe. Sizes 6-7 use 4" Stainless Steel Vent Pipe (not included)

C.S.A. Certified For Natural Gas Or Propane

Tested for 50 PSI ASME Working Pressure

KSW Series

Oil-Fired Hot Water Boiler

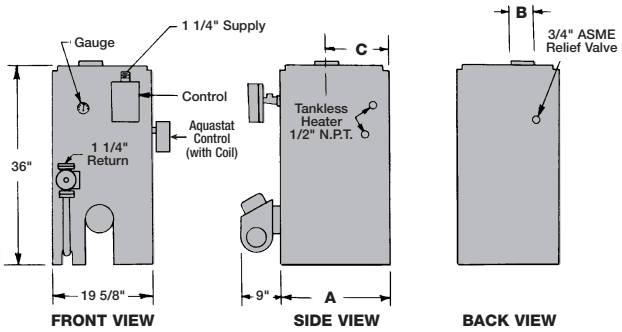

Standard Equipment:

- Assembled boiler with insulated jacket
- Combination high limit control and circulator relay, on boilers without optional tankless heater coil
- Combination high limit control, low limit control and circulator relay, on boilers with optional tankless heater coil
- Target wall (vacuum formed refractory ceramic fiber)
- Combination pressure/temperature gauge
- Barometric draft control 6"
- 1 1/4" circulator
- 3/4" boiler drain valve
- 30 lb. ASME relief valve
- Beckett AFG series oil burner equipped with nozzle, primary control, interrupted duty ignition, PSC motor and clean cut (solenoid) pump

Specifications:

Model No. with Tankless Coil	Model No. without Tankless Coil	Number of Sections	Input *MBH	**Heating Capacity *MBH	NET I=B=R Rating *MBH	Firing Rate †GPH	Tankless Heater Capacity ††GPM	Chimney Size	DIMENSIONS (Inches) A	B	C	A.F.U.E. †††	Approx. Shipping Weight
★ 3K.60C	★ 3K.60	3	84	74	64	.60	2.85	8" x 8" x 15'	17 3/4	6	9 3/4	86.1	500
★ 3K.75C	★ 3K.75	3	105	92	80	.75	3.00	8" x 8" x 15'	17 3/4	6	9 3/4	85.6	500
3K1.00C	3K1.00	3	140	120	104	1.00	3.25	8" x 8" x 15'	17 3/4	6	9 3/4	84.4	500
★ 4K.90C	★ 4K.90	4	126	111	97	.90	3.15	8" x 8" x 15'	21	6	11 3/8	86.4	580
★ 4K1.25C	★ 4K1.25	4	175	153	133	1.25	3.50	8" x 8" x 15'	21	6	11 3/8	85.9	580
★ 4K1.50C	★ 4K1.50	4	210	181	157	1.50	3.75	8" x 8" x 15'	21	6	11 3/8	85.1	580
★ 5K1.20C	★ 5K1.20	5	168	147	128	1.20	3.45	8" x 8" x 15'	24 1/4	6	13	86.1	680
5K1.75C	5K1.75	5	245	210	183	1.75	4.00	8" x 8" x 15'	24 1/4	6	13	84.8	680
5K2.00C	5K2.00	5	280	239	209	2.00	4.25	8" x 8" x 20'	24 1/4	6	13	84.0	680

* MBH = 1,000 Btu per hour Btu = British Thermal Unit

** Heating capacity based on 13% CO_2 with a 0.02" W.C. draft overfire, and a #1 smoke or less. Testing was done in accordance with the D.O.E. (Department of Energy) test procedure.

† GPH = Gallons per hour oil at 140,000 Btu per gallon

†† Gallons of water per minute, heated from 40° to 140°, with 200° boiler water temperature, intermittent draw.

††† A.F.U.E. = Annual Fuel Utilization Efficiency based on D.O.E. test procedure.

★ As an Energy Star Partner, Pennco has determined that this product meets Energy Star guidelines for energy efficiency.

Tested for 50 PSI ASME Working Pressure

16 Series
Gas-Fired Steam Boiler

Standard Equipment:
- Assembled boiler with insulated jacket
- Two 2 1/2" supply tappings and two 2 1/2" return tappings
- Integral draft diverter – built into jacket
- 24 volt, 40VA transformer
- Pressure limit control
- Electronic probe type low water cut off
- Flame rollout safety shut-off fuse link and blocked vent safety shut-off switch
- Glass water level gauge
- Steam pressure gauge
- 3/4" boiler drain valve
- 15 lb. ASME pop safety valve
- Two 2 1/2" square head pipe plugs – to plug unused supply and return tappings
- Vent damper
- Completely installed and wired gas control systems with burners and manifold, ***consisting of:***
  - Automatic redundant combination gas valve, 24 volt, with pilot filter

  Electronic Ignition Only:
  - Intermittent Pilot Control, continuous re-try, 100% shut-off
  - Combination pilot/burner/electrode/flame sensor

  Standing Pilot Only:
  - Pilot burner and thermocouple

Optional Equipment:
- Combustible floor plate – 14614031 for 3-6 section; 14614032 for 7-9 section
- Electronic water feeder
- Float type low water cut-off in place of probe type
- Natural to propane conversion kit (when ordering kit, please provide serial number of boiler to be converted)

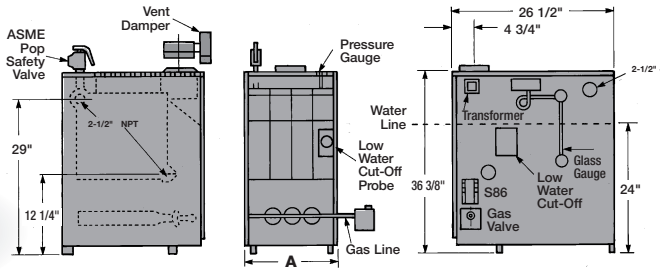

Specifications:

MEA# 77-91-E

BOILER UNIT NUMBER		Number of Sections	† NATURAL GAS				† PROPANE GAS				DIMENSIONS (in.)		A.F.U.E.	
Cont. Pilot with Damper	E/I Pilot with Damper		AGA Input ††MBH	Heating Capacity ††MBH	NET I=B=R ††MBH	NET I=B=R Sq.Ft. EDR	AGA Input ††MBH	Heating Capacity ††MBH	NET I=B=R ††MBH	NET I=B=R Sq.Ft. EDR	Flue Diameter	"A" Width	HSD with Damper	HSID with Damper
1603HSD	1603HSID	3	75	62	47	196	70	58	44	183	5	11 1/4	81.1	82.7
1604HSD	1604HSID	4	112	91	68	283	105	85	64	267	6	14 1/2	78.8	82.0
1605HSD	1605HSID	5	150	122	92	383	140	114	86	358	6	17 3/4	79.2	82.0
1606HSD	1606HSID	6	187	153	115	479	175	143	107	446	7	21	79.6	82.0
1607HSD	1607HSID	7	225	183	137	571	210	171	128	533	7	24 1/4	80.1	82.0
1608HSD	1608HSID	8	262	214	161	671	245	200	150	625	7	27 1/2	80.5	82.0
1609HSD	1609HSID	9	299	245	184	767	280	229	172	717	7	30 3/4	80.9	82.0

† For altitudes above 2,000 feet, ratings should be reduced at a rate or 4% for each 1,000 feet above sea level.

†† MBH = 1,000 Btu per hour
Btuh = British Thermal Unit per hour

Heating capacity based on D.O.E. (Department of Energy) standards
* Add 5-1/2" to height for vent damper
EDR = Equivalent Direct Radiation

Tested for 50 PSI ASME Working Pressure

KSC Series
Oil-Fired Steam Boiler

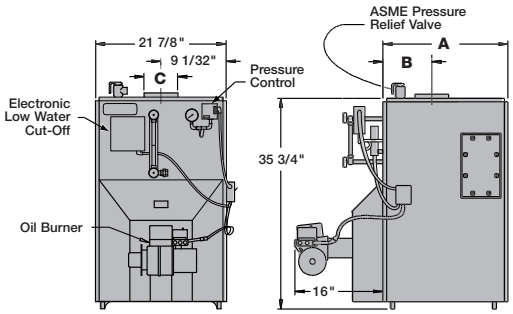

Standard Equipment:
- Crated Cast-Iron Boiler
- Flush Jacket
- Swing-Out Burner Door
- Clean Cut Beckett Burner
- Target Wall/Liner
- ASME Relief Valve
- Water Level Gauge
- Steam Pressure Gauge
- Steam Pressure Control
- Electronic Low Water Cut-Off
- Drain Valve
- Wiring Harness
- Burner Electric Disconnect
- Plastic Cover
- Supply Tappings (Qty. 2 - 2")
- Return Tapping – 1 1/2"
- Skim Port

Tankless Water Heater Option:
- Tankless Hot Water Coil
- Limit Control

Specifications:

MEA# 182-86E

Boiler Model Number [1]	I = B = R Oil Burner Input [2]		D.O.E. Heating Capacity MBH [4]	I = B = R Net Ratings [3,4]		Pump Pressure PSI	Nozzle Furnished 140 PSIG [5]	A.F.U.E. Rating	DIMENSIONS			Tankless Water Heater Capacities Intermittent Draw G.P.M. (Model L-24)	Boiler Water Content Gals.
	G.P.H.	MBH [4]		Steam MBH	Sq. Ft. Steam				A Length of Flush Jacket	B Front of Jkt. to C/L of Flue Out	C Diameter of Flue Outlet		
*KSC0365	0.65	91	79	59	246	140	.60 80°B	85.00	16 3/8	6 1/2	6	**	11
KSC3100	1.00	140	116	87	363	140	.85 80°B	81.50	16 3/8	6 1/2	6	4.5	11
*KSC4100	1.00	140	120	91	377	140	.85 80°B	85.00	20 1/4	8 1/2	7	4.5	13
KSC4125	1.25	175	145	109	454	140	1.10 60°B	82.50	20 1/4	8 1/2	7	4.5	13
KSC4150	1.50	210	170	128	533	140	1.25 80°B	81.00	20 1/4	8 1/2	7	4.5	13
KSC5175	1.75	245	202	152	633	140	1.50 80°B H	83.00	23 7/8	10 1/4	8	5.0	15
KSC5200	2.00	280	227	170	708	140	1.75 70°B H	82.00	23 7/8	10 1/4	8	5.0	15
KSC6225	2.25	315	251	188	783	140	2.00 45°B	—	27 1/2	8 5/16	8	5.0	17
KSC7275	2.75	385	307	230	958	140	2.25 60°B	—	31 1/8	8 5/16	8	5.0	19

* Indicates an Energy Star efficient Product

** Available on request.

Explanation Notes:
1. Add suffix "T" to denote boiler with tankless heater.
2. I=B=R burner capacity is based on an oil heating value of 140,000 Btu/gal. and with 13% CO_2.
3. Net ratings based on 170°F temperature in radiators and include 33% allowance for normal piping and pick-up load. Consult manufacturer for unusual piping and pick-up requirements.
4. For altitudes above 2,000 ft., ratings may be reduced at the rate of 4% for every 1,000 ft. above sea level.
5. Nozzle sizes with an H designation are Hago brand, all others are Delevan.
6. The electrical service is 120 Volts, 15 Amps, 60 Hz.

Tested For 15 LBS. PSI ASME Working Pressure

Pennco

Indirect Hot Water Heater

Commercial Quality and Capability. Residential Affordability.

1. Domestic Water Hot and Cold Side Connection – HL 30SK, HL 40SK, HL 50SK.
   Hot Only Top Connection – HL 80SK, HL119SK.
   Cold Only Bottom/Side – HL 80SK, HL119SK.
2. Coil Connections Include dielectric unions for both inlet and outlet
3. 2" Foam Insulation
4. Heavy-Duty Steel Jacket
5. Replaceable Extra-Thick Magnesium Anode Rod
6. Corrosion Resistant Porcelain-coated Enamel Smooth Coil and Interior Tank Walls

- Immersion Aquastats standard on all models
- Surface-mounted Thermostat
- Self-cleaning Drain Valve
- Factory Installed T&P Valve

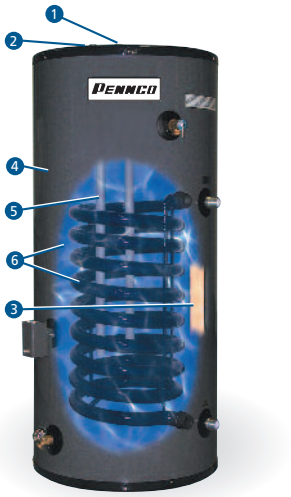

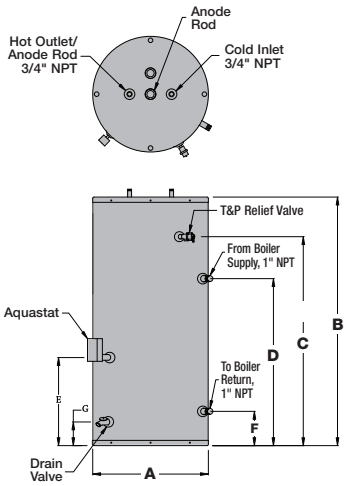

Models HL30SK, HL40SK, HL50SK

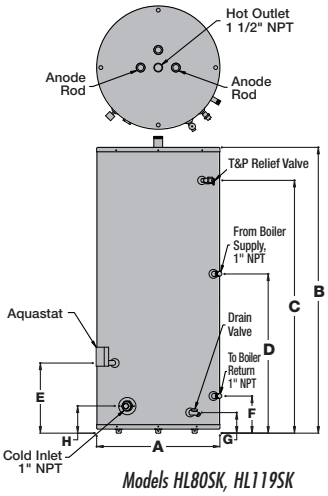

Models HL80SK, HL119SK

Specifications:

Model Number	Storage Capacity	DIMENSIONS (inches) A	B	C	D	E	F	G	H	Shipping Weight
HL30SK	30 Gal.	22"	35¾"	27¾"	19½"	11¾"	6½"	4½"	N/A	180 lbs.
HL40SK	38 Gal.	22"	42¾"	34¾"	31½"	16¾"	6½"	4½"	N/A	226 lbs.
HL50SK	45 Gal.	22"	48¾"	39¾"	31½"	16¾"	6½"	4½"	N/A	231 lbs.
HL80SK	75 Gal.	24"	64¾"	57⅛"	33"	19¼"	8"	5"	5"	297 lbs.
HL119SK	110 Gal.	28"	65¼"	57¾"	33¾"	16¼"	8¾"	5"	6½"	397 lbs.

NOTES: Potable outlet water temperature at 135° F as per D.O.E. • Boiler output should be at least 74,000 BTU/h.

First Hour Rating (Gal) @ Coil Output (Btu/hr)

MODEL	180°F / 6 GPM*	180°F / 10 GPM*	180°F / 12 GPM*	200°F / 6 GPM*	200°F / 8 GPM*	200°F / 10 GPM*	200°F / 12 GPM*
HL30SK	107 @ 53,000	114 @ 57,000	117 @ 59,000	129 @ 67,000	132 @ 69,000	136 @ 71,000	139 @ 73,000
HL40SK	141 @ 69,000	165 @ 84,000	177 @ 92,000	171 @ 88,000	183 @ 96,000	195 @ 104,000	207 @ 111,000
HL50SK	148 @ 69,000	172 @ 84,000	184 @ 92,000	178 @ 88,000	190 @ 96,000	202 @ 104,000	214 @ 111,000
HL80SK	188 @ 76,000	212 @ 91,000	224 @ 98,000	221 @ 97,000	233 @ 104,000	245 @ 112,000	257 @ 119,000
HL119SK	220 @ 76,000	244 @ 91,000	256 @ 98,000	253 @ 97,000	265 @ 104,000	277 @ 112,000	289 @ 119,000

NOTES: First Hour Rating = First Draw + Continuous Draw * Coil Input (temperature, flow rate). Ratings based on 77°F rise with 58°F inlet potable water.
All data obtained through testing in accordance with GAMA INDIRECT-FIRED WATER HEATER TESTING STANDARD IWH-TS-1_MARCH 2003

Additional Boiler Model Notes:

	15B	FSB	KSW	KSC	16
• Selection of water boiler size should be based upon Net I=B=R Rating being equal to or greater than the calculated heat loss of the building.	✔	✔	✔		
• Selection of steam boiler size should be based upon Net I=B=R Steam Rating being equal to or greater than the installed radiation in square feet EDR.				✔	✔
• The ratings marked Net I=B=R Ratings represent the portion of the heat output that can be applied to heat the radiation or terminal units.	✔	✔	✔	✔	✔
• Ratings based on selection factors recommended by Hydronics institute for piping and pickup. Net water boiler ratings are based on an allowance of 1.15, and net steam boiler ratings are based on an allowance of 1.33. For water applications with high piping and pickup requirements, use steam rating.	✔	✔	✔		
• Ratings based on selection factors recommended by Hydronics institute for piping and pickup. Net steam boiler ratings are based on an allowance of 1.33.				✔	✔

	15B	FSB	KSW	KSC	16
• All boilers are design-certified for installation on non-combustible floors.	✔	✔	✔	✔	✔
• For installation on any combustible floor, use combustible floor kit. If combustible floor kit is unavailable refer to installation manual for specific instructions for that model.	✔	✔			✔
• Recommended chimney height 20 feet. In special cases where conditions permit, chimney height may be reduced. Refer to the latest revision of National Fuel Gas Code.	✔	✔	✔	✔	✔
• Electrical service to be 120 volts, 15 amps, 60Hz3.	✔	✔	✔	✔	✔
• Manufacturer should be consulted on installations having other than normal piping and pickup requirements.	✔	✔	✔	✔	✔

Specifications and dimensions for all Pennco SILVER models are subject to change without notice.

PENNCO

2201 Dwyer Avenue, Utica, New York 13501
Phone: 315-797-1310 • Fax: 866-432-7329
E-mail: info@ecrinternational.com
Web: www.penncoboilers.com

USA Contractor Assistance:
800-325-5479

ecr

PN 240004958 REV 3/12